9432-78 Top-Mount Stick
Installation Instructions
I-SD00253

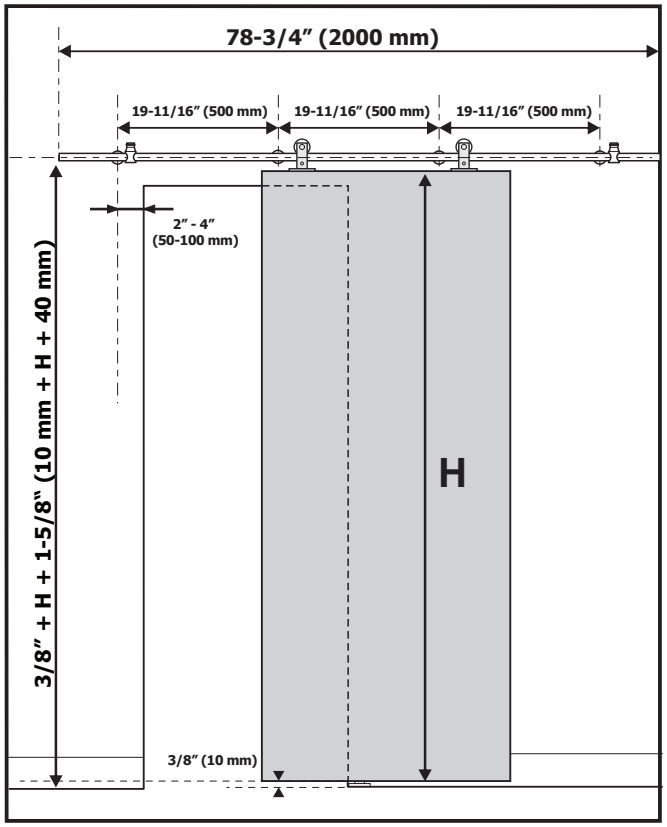

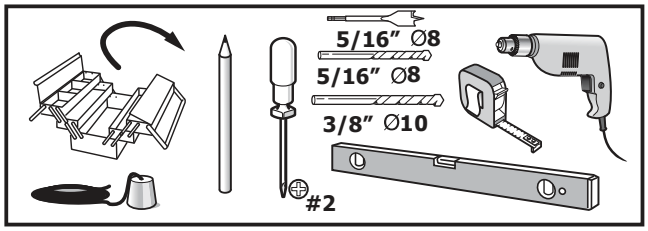

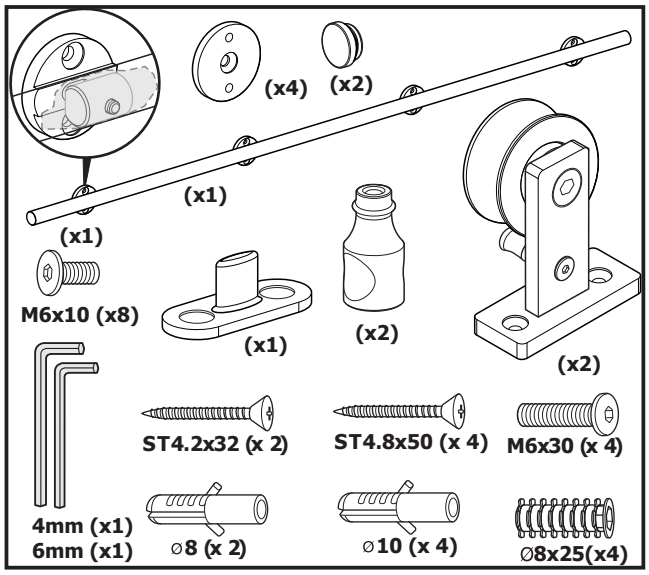

To obtain the maximum weight capacity, all fasteners must be mounted securely into solid wood of studs or blocking within the wall or wood mounted to the face of the wall.

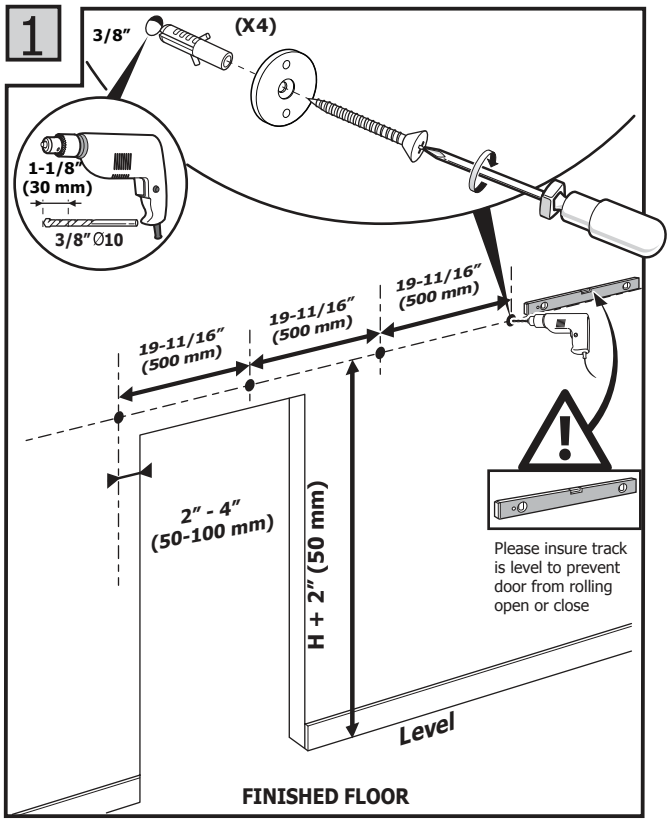

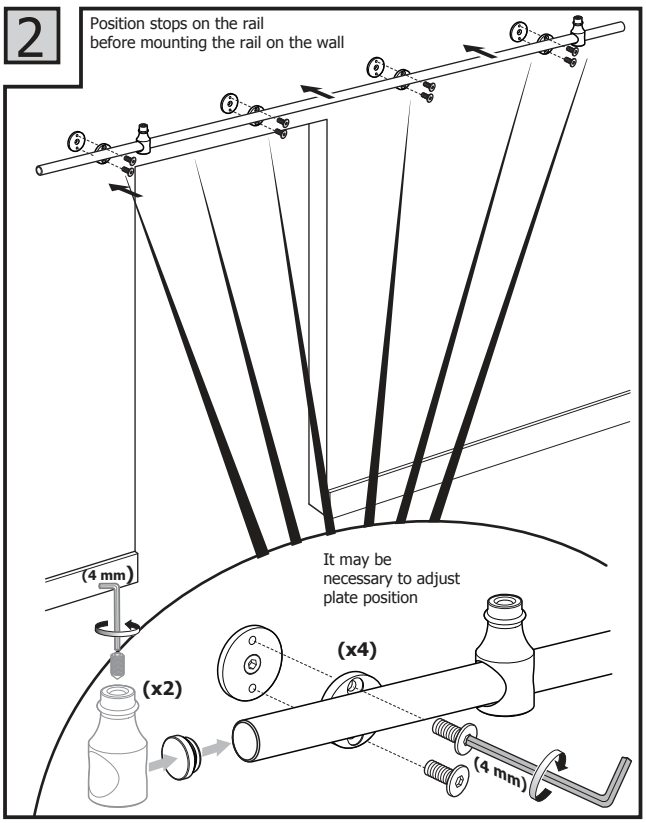

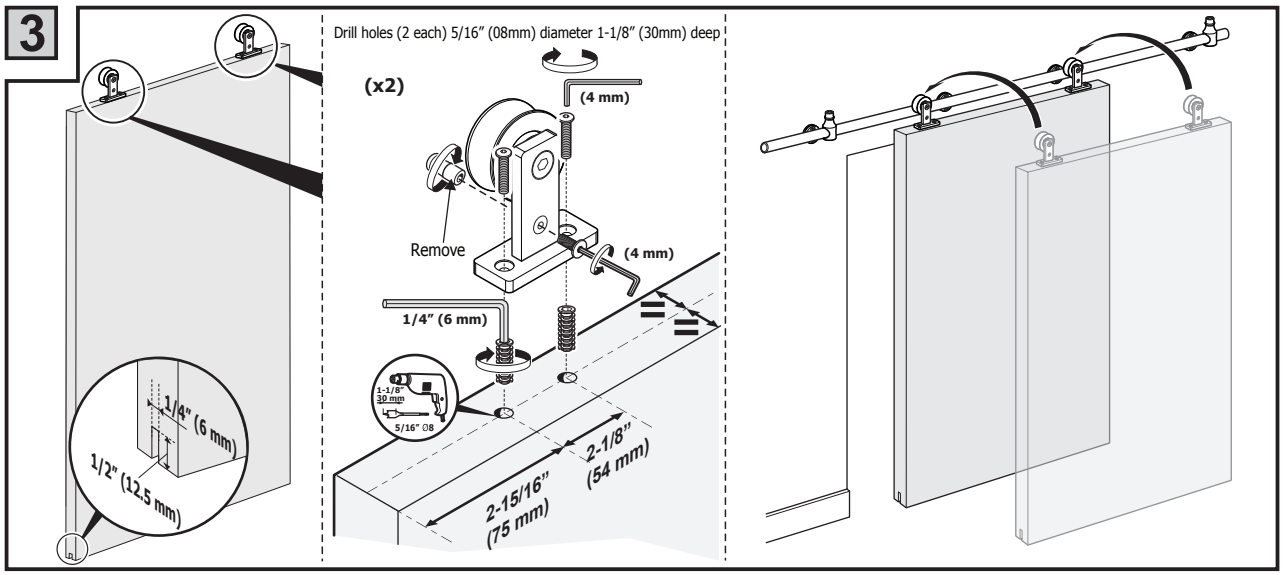
3
Drill holes (2 each) 5/16" (08mm) diameter 1-1/8" (30mm) deep
(x2)
(4 mm)
Remove
(4 mm)
1/4" (6 mm)
1-1/8" 30 mm
5/16" Ø8
2-1/8" (54 mm)
2-15/16" (75 mm)
1/4" (6 mm)
1/2" (12.5 mm)

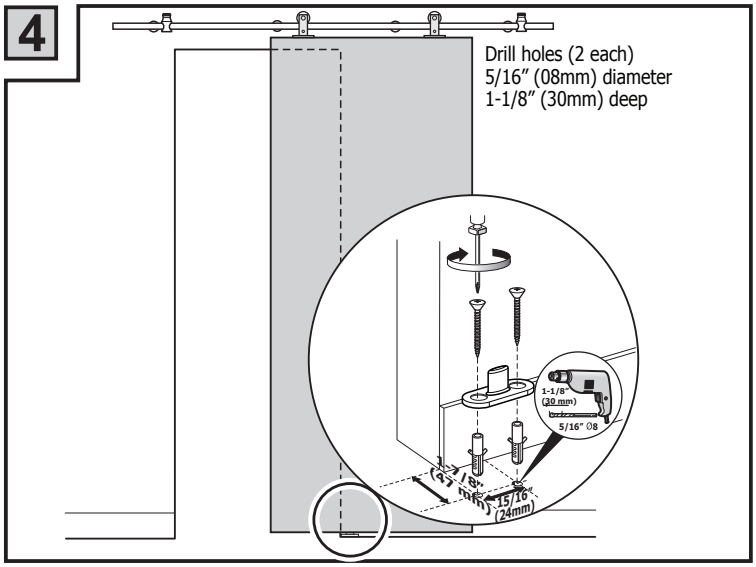
4
Drill holes (2 each)
5/16" (08mm) diameter
1-1/8" (30mm) deep
1-1/8" (30 mm)
5/16" Ø8
(1 1/8")
15/16" (24mm)

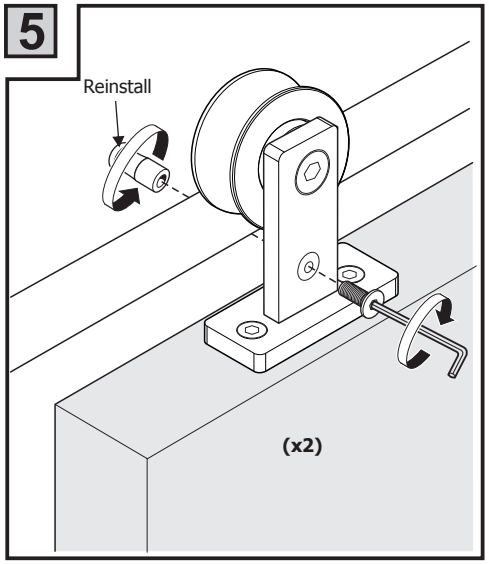
5
Reinstall
(x2)

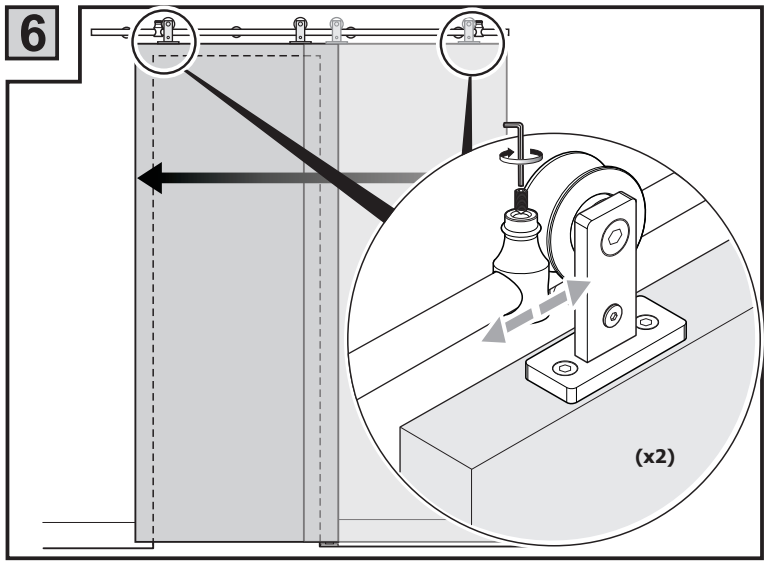
6
(x2)